REV	DESCRIPTION	APPD	DATE

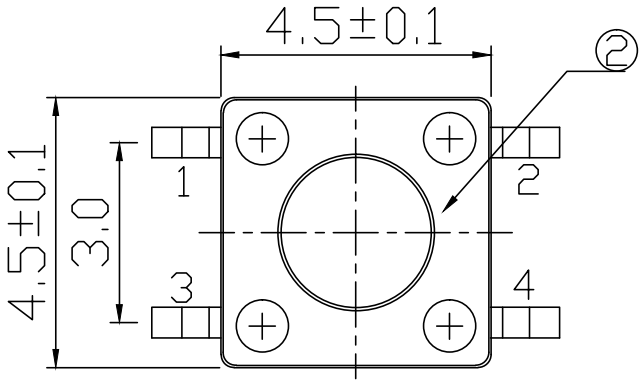

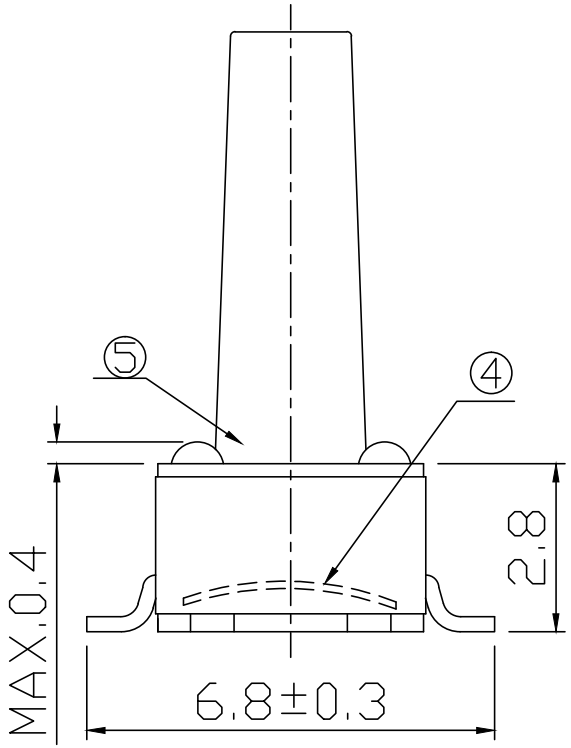

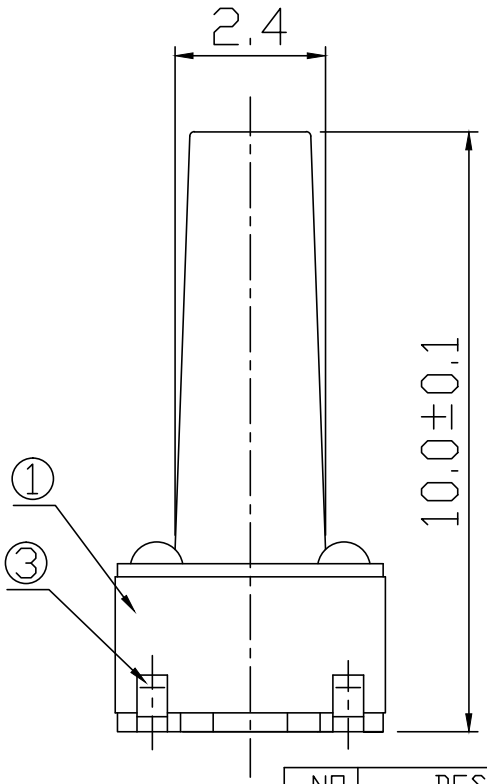

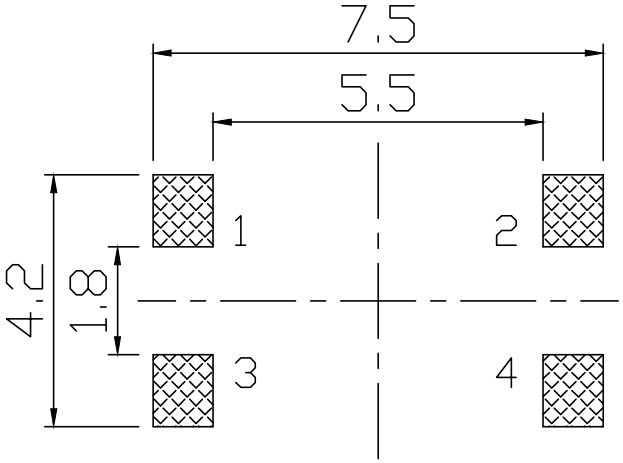

P.C.B Holes diagram

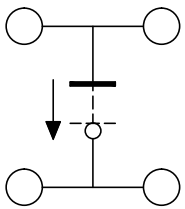

Circuit diagram

1.额定功率/Rating:DC 12V 50mA;
2.接触阻抗/Contact Resistance:100mΩ Max;
3.绝缘/Insulation Resistance:100MΩ Min;
4.耐电压/Withstanding Voltage:AC250V For 1 Minute
5.寿命/Life:100,000 cycler Min;
6.动作力/Operating Force:250±50gf
7.行程/Travel:0.2±0.1mm

NO.	DESCRIPTION	QTY	MATERIAL	FINISH
1	BASE	1	PPA	BLACK
2	COVER	1	SPCC	PLATING Sn
3	TERMINAL	4	BRASS	PLATING Ag
4	CONTACT	1	SUS	PLATING Ag
5	STEM	1	PPA	BLACK

UNIT:MM	SIZE: A4	SHEET: 1 OF 1	TITLE: TACT SWITCH
	SCALE: /	VER: 1	MODEL NO: TS44A-S10-M
PART NO:	DWG NO:		
GENERAL TOLERANCE: X.=±0.3, .X=±0.15 .XX=±0.1, .XXX=±0.05 .X°=±2° .XX°=±1°	DESIGNER BY: DONY		岡琦電子有限公司
	APPROVED BY: JACK		GONGKIN ELECTRONIC CO.,LTD
	DATE:		